numatics™

Vacuum Products

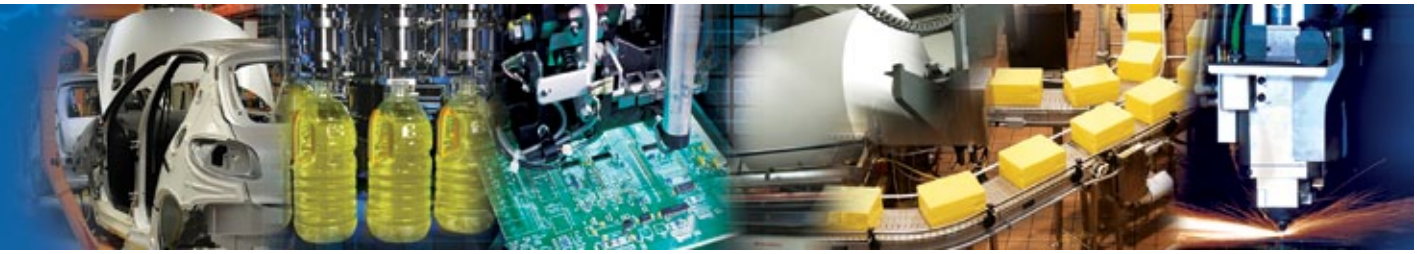

www.numatics.com

EMERSON™
Industrial Automation

Large Area Gripper – NFX Series

The NFX Series large area gripper is designed to handle a wide range of work piece dimensions and/or undefined positions. This product provides a reliable solution for handling work pieces with gaps. It works extremely well in handling cardboard, metal, wood, plastic and glass. The NFX gripper comes standard with integrated multi-stage ejectors.

Design Features

Robust aluminum structure provides strength, but also light weight allowing for fast cycle times.

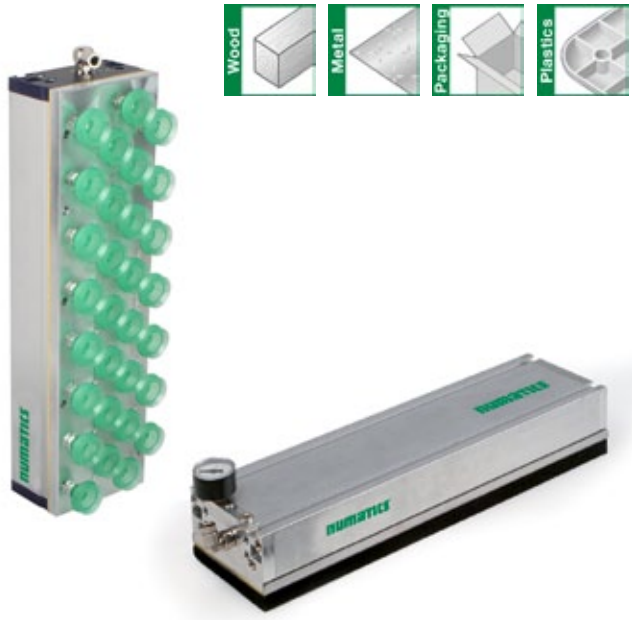

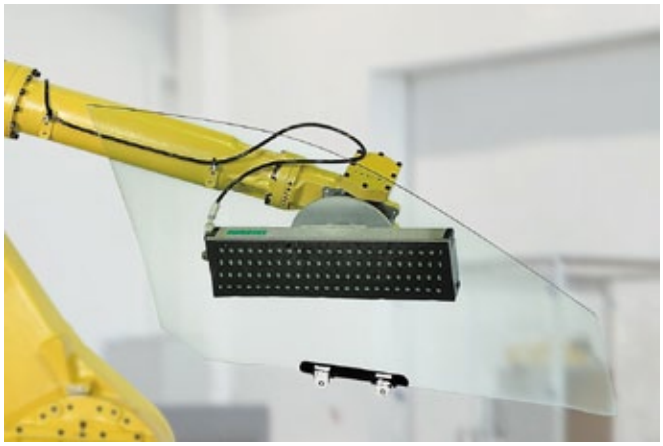

Design

- Extruded aluminum frame/profile
- Integrated functions built-in to end covers
- Integrated plug-in ejector; easily replaceable
- Sealing plate
- Available with foam pad or suction cups
- Hole spacing on foam is 18 mm
- Foam height is 20 mm
- Suction cups – 1.5 Bellows – Packaging type; Elastodur material
- Available with two different valve configurations (SVK & SWX)
- Cost effective design (SWX) - Flow Resistor Technology
- Fast cycle times and rough work pieces (SVK)

Technical Data

NFX (Foam Pad and Suction Cups)

Type	Noise Level (db (A))	Max. Evacuation Level (%)
NFX	65	80

Information subject to change without notice. For ordering information or regarding your local sales office visit www.numatics.com.

How to Order

NFX Series – Large Area Gripper

Large Area Gripper Series	Part number	Sealing Plate (Foam) or Suction Cups	Feature	Numatics Description
NFX	NFXSVK43518XXXX	SEALING PLATE (FOAM)	SVK	Quick blow-off/fast cycle times for increased production speed; Good for porous or rough work pieces; high degree of air flow
	NFXSWX43518XXXX	SEALING PLATE (FOAM)	SWX	Flow screens for any installation position and high accelerations
	NFXSVK435541SP3	1.5 BELLOWS SUCTION CUPS	SVK	Quick blow-off/fast cycle times for increased production speed; Good for porous or rough work pieces; high degree of air flow
	NFXSWX435541SP3	1.5 BELLOWS SUCTION CUPS	SWX	Flow screens for any installation position and high accelerations

	Part number	Sealing Plate (Foam) or Suction Cups	Numatics Description
Accessories	NDIPL4351186XXX	Replacement Sealing Frame	Suitable for all NFX units
	NDIPL435181010F	Replacement Foam	Replacement Foam NFX435.5 18 O10O10 F
	NSPB1030XXE7XXX	Replacement Suction Cups	Packaging Cup-1.5 Bellows: 30mm, Diameter: 30mm, Elastodur: 65

Dimensions: mm

NFX (Foam Pads)

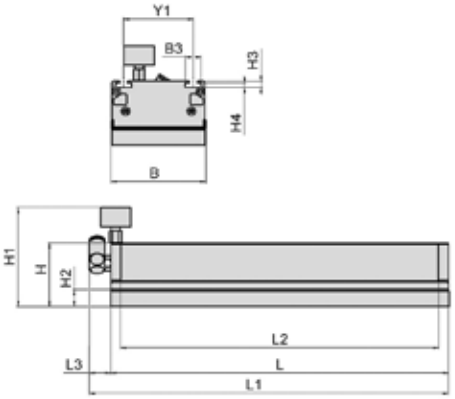

NFX (Suction Cups)

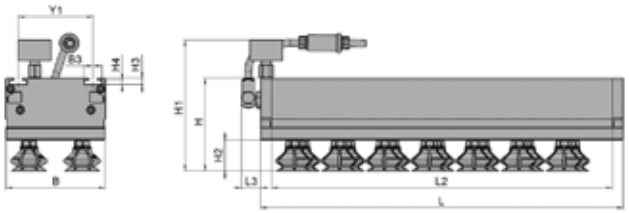

Type	B	B3	H	H1	H2	H3	H4	L	L1	L2	L3	Y1
NFXSWX43518XXXX	122	21	82	128	22	7.7	5.2	435.5	462.5	409.5	27	90
NFXSVK43518XXXX	122	21	82	128	22	7.7	5.2	435.5	462.5	409.5	27	90
NFXSWX435541SP3	120	21	112	158	37	7.7	5.2	435.5	-	409.5	23	90
NFXSVK435541SP3	120	21	112	158	37	7.7	5.2	435.5	-	409.5	23	90

Information subject to change without notice. For ordering information or regarding your local sales office visit www.numatics.com.

NFX with Integrated Vacuum Generation

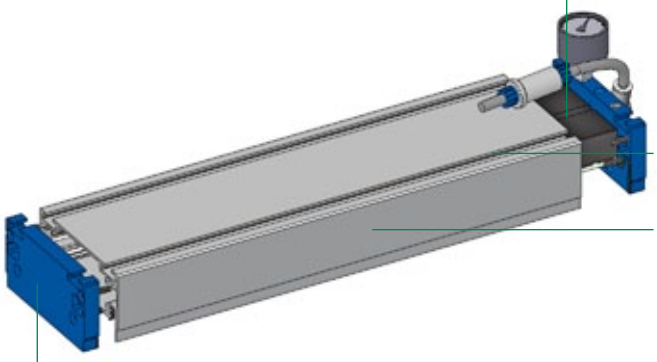

Vacuum generator
- Plug-in ejector with lightweight design
- Quickly replaceable
- Alternatively with up to 4 multi-stage ejectors for optimum performance adjustment

Vacuum display using vacuum manometer

T-slot
- For flexible mechanical attachment of the gripper

Main body
- Made from extruded aluminium section
- Variable in width by combining units
- Variable in length

End cover with function modules
- For the “sensor”, “blow-off” and “separation” connections

+

Valve Component

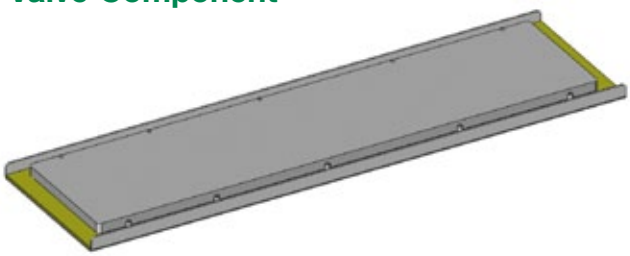

Valve type SVK
- Quick blow-off and fast cycle times for increased production speed
- High degree of air passage for handling porous and rough workpieces

Valve type SWX
- Flow screens for any installation position and high accelerations

+

Sealing plate

Suction pads

Sealing plate (foam)
- Flexible and highly resistant
- Different grids according to the width of the work piece
- Quickly replaceable
- Optional: sealing plate with integrated filter screen to protect against contamination

Suction pads (elastomer)
- Soft, adaptable sealing lip
- Quickly replaceable

=

Example:

Large-area vacuum gripping system
NFX with sealing plate

Example:

Large-area vacuum gripping system
NFX with suction pads

Information subject to change without notice. For ordering information or regarding your local sales office visit www.numatics.com.